10A / 16A Latching Relay

LJ5-LR

LJ5 - LR - S - 10 - 1C - 12 - D - N

- Model No.:- LJ5
- Series No..:- LR:- Latching relay
- Enclosure:- S:- Sealed Type
- Contact rating:- 10: 10A / 16: 16A
- Contact Form:- 1A / 1C
- Coil Voltage:- 3~24VDC
- Single / Double Coil:- S:- Single / D:- Double
- Coil Pins Polarity:- P:- Positive(Pin1+ve, Pin3-ve, Pin2+ve)
  N:- Negative(Pin1-ve, Pin3+ve, Pin2-ve)
  Nil:- For single coil

Model	LJ5-LR					
Features	Dimension L* W * H (mm)	21.6 * 10.9 * 16.0				
	Terminal Type	PCB Type				
	Weight	8 gm Approximately				
Contact Data	Contact Form	1C / 1A				
	Contact Material	Ag Alloy				
	Contact Capacity	10:- 10A / 277VAC / 30VDC 16:- 16A / 277VAC / 30VDC				
	Contact Resistance	100mΩ Max.				
Coil Data	Coil Voltage (VDC)	3 ~ 24VDC				
	Coil Power Consumption	Single coil:- 0.25W / Double coil:- 0.5W				
	Coil Specification	Coil Voltage	Coil Resistance (Ω) ±10%		Pull in Voltage (Max. VDC)	Drop Out Voltage (Min. VDC)
			Double coil	Single coil		
		3V	18	36	75%	5%
		5V	50	100	75%	5%
		12V	287.8	576.9	75%	5%
		24V	1153.8	2307.6	75%	5%
General Data	Dielectric Strength (For 1 min.)	4000VAC (Between coil & Contacts)				
		1000VAC (Between open Contacts)				
	Insulation Resistance	1000MΩ Min. at 500VDC				
	Operate / Release Time	10ms / 10ms max.				
	Electrical Life	1×10^5 at rated resistive load.				
	Mechanical Life	1×10^7 at no load condition.				
	Operating Temperature	-40 °C to + 85 °C				
Dimension	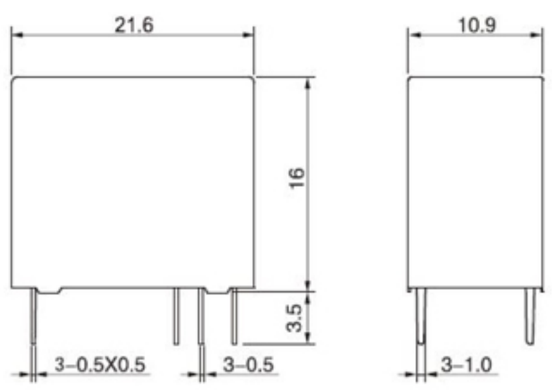					
	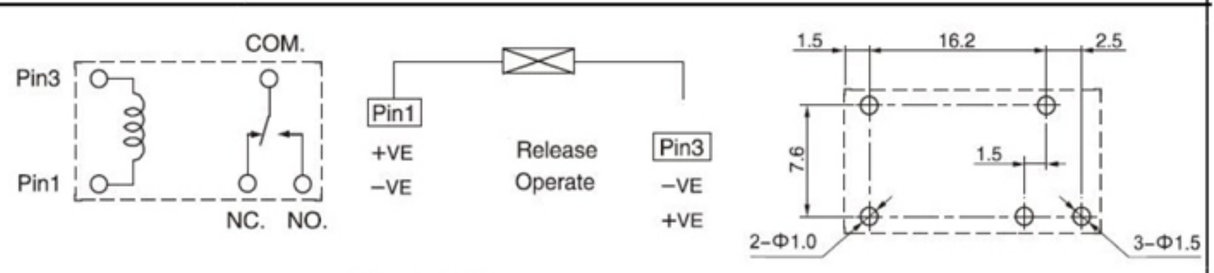					
	Single Coil					
	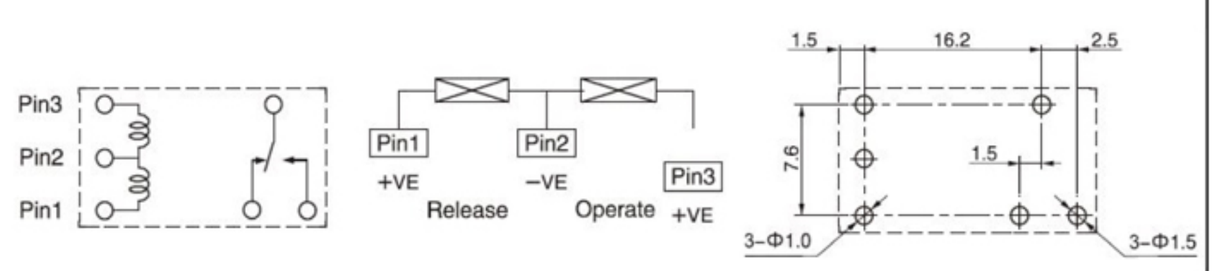					
	Double Coil					
Application	Office machines, Audio equipment, Domestic Appliances, etc.					